5 JOULE XENON & HIGH INTENSITY LED BEACONS
EExd, Weatherproof
SM87 & LED Ranges

Introduction

These certified beacons have been designed for use in harsh environmental conditions. The stainless steel or marine grade alloy enclosures are suitable for use offshore or onshore, where light weight combined with corrosion resistance and strength is required. Units can be painted to customer specification and fitted with identification labels.

LED version available, offering extended lifetimes.

A high temperature version is available – contact MEDC for details.

- ★ Zone 1 and Zone 2 use.
- ★ EExd IICT4/T6.
- ★ ATEX approved Ex II 2GD.
- ★ BASEEFA Certified.
- ★ UL Listed for USA and Canada:
  - – Class I, Div. 1, Groups C & D.
  - – Class I, Zone 1 AExd IIB.
- ★ CSA Certified.
- ★ GOST 'R' & 'K' Certified*.
- ★ Chinese (CQST) Certified.
- ★ Brazilian (Inmetro) Certified.
- ★ IP66 and IP67.
- ★ Certified temperature* –55°C to +70°C.
- ★ High temperature version (up to 85°C) available.
- ★ Stainless steel or marine grade alloy.
- ★ Xenon or LED versions.
- ★ Various lens colours.
- ★ Optional lens guard.
- ★ Telephone or relay initiated.

*Depending on version.

Distribuição: Segurança Industrial Equipamentos
Fone/Fax: (41) 4063-9687
cml@segind.com.br - segindbr@hotmail.com
www.segind.com.br

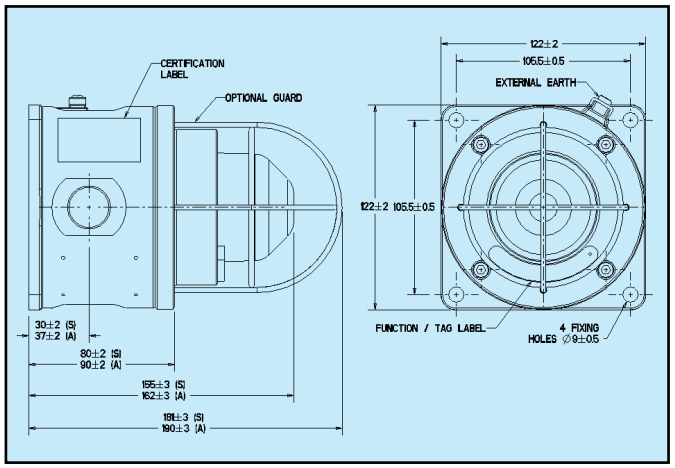

Weight:	HXBS & LEDS – 3.8kg each (approx). HXBA & LEDA – 2kg. each (approx.).
BASEEFA Certified Temperature:	HXB = –55°C to +70°C. LED = –20°C to +40°C. Versions are available certified up to +55°C maximum with a T4 rating. XBT (High temp) = –40°C to +85°C.
CSA Certified Temperature:	–50°C to +40°C.
UL Certified Temperature:	HXB = –55°C to +70°C. XBT (High Temp.) = –40°C to +85°C.
GOST 'R' Certified Temperature:	HXB = –55°C to +55°C.
Ingress Protection:	IP66 & IP67.
Terminals:	HXB & XBT – 6 off suitable for up to 2.5mm² cable. LED – 6 off suitable for up to 2.5mm² cable.
Telephone initiation or relay interface:	Initiation by telephone ringing tone or low voltage control signals.
Labels:	Duty & Tag Labels optional.
Entries:	Up to 4 x 20mm/25mm ISO or 1/2"/3/4" NPT.

Specification

Certification: ATEX EExdIIC T6.
Cert. No. Baseefa 03ATEX0222.
CENELEC EN50014 and EN50018 and EN50019.
CSA Certification to C22.2 Nos. 0, 0.4, 0.5, 9, 30-M1986, 94-M91, 137-M1981. Class I. Div 1. Group D. Enclosure 3/4. Cert. No. 96406. (HXB only).
UL Listed for USA & Canada: Class I, Div 1, Groups C & D and Class 1, Zone 1. (HXB & XBT only). Listing No. E187894.
Refer to UL data sheet, at rear of catalogue, for complete information.
GOST 'R' Certification: 1Exd IIC T4, (HXB only) Russian Fire Approved (VNIIPO).
GOST 'K' Certification: Exd IIC T4,.
Chinese (CQST) Certification: Exd IIC T4/T6, (HXB only).
Brazilian (Inmetro) Certification: BR-Ex d IIC T3/T4/T5/T6

Material: HXBS, XBTS and LEDS – Grade 316 ANC4B Stainless Steel.
HXBA, XBTA & LEDA – LM25 TF Marine Grade Alloy.
Lens – Glass.
Note: Terminal Chamber available only in Stainless Steel.
UL version available only in marine grade alloy.
CSA version available only in stainless steel.

Finish: Epoxy paint finish as standard or to customer's specification.

Voltage	DC 24	DC 48	AC 50/60 Hz 110	120	220	240	254
SM87 HXB XBT Tube Energy (Joules)	5	5	6	7	6	7	8
Peak Current Consumption (mA)	320	170	250	275	120	135	150
Effective Intensity (Cd)	29	29	32	39	32	39	44
Peak Intensity	22213	22213	25061	30187	25061	30187	34174
Power Consumption (Watts)	7.2	7.6	25	27	25	27	35
SM87 LED Current Consumption	165mA	85mA	N/A	N/A	N/A	N/A	N/A

FOR COLOURED LENSES

Colour	Red	Blue	Amber	Green	Yellow
Multiplying Factor	0.15	0.12	0.51	0.49	0.86

The photometric data has been verified by BSI. A report is available if required.

LED Light Output	Colour	Total LED Output (Candela)
Steady or Flashing (customer selectable)	Red	192
	Amber	64
	Green	17
	Blue	64

LED/Lens Colour: Red, Blue, Green, Amber, Yellow (not LED) or Clear (not LED).
Flash Rate: 60fpm as standard, other flash rates available on request.

Ordering Requirements

The following code is designed to help in the selection of the correct unit. Build up the reference number by inserting the code for each component into the appropriate box. **For standard products, available ex-stock, contact sales office for details.**

Model [ ] Certification [ ] Voltage [ ] Lens/LEDcolour [ ] Lens Guard [ ] Entries [ ] Tag/Duty Label [ ] Initiate Option [ ] Finish [ ]

Type	Code
Xenon (stainless steel)	SM87HXBS
Xenon (alloy)	SM87HXBA
Xenon High Temp. (alloy)	SM87XBTA*
Xenon High Temp. (stainless steel)	SM87XBTS*
LED EExd (stainless steel)	SM87LEDS
LED EExd (alloy)	SM87LEDA

*XBT only available 24V d.c.

Certification	Code
ATEX	B
UL	UL
CSA	C
GOST 'R'*	G
GOST 'K'	K
Chinese (CQST)	Q
Inmetro	DM

Only HXBS is available CSA certified. Only HXBA & XBTA is available UL certified.

*VNIIPO Approved as standard.

Colour	Code
Red	R
Blue	B
Green	G
Amber	A
Yellow (not LED)	Y
Clear (not LED)	C

Voltage	Code
24V d.c.	024
48V d.c. not XBT	048
110V a.c. not LED, XBT	110
120V a.c. ,,	120
220V a.c. ,,	220
240V a.c. ,,	240
254V a.c. ,,	254

Entries	Code
20mm	1
25mm	2
1/2" NPT	3
3/4" NPT	4
Top (only on HXB)	*T
Bottom	*B
RHS	*R
LHS	*L

*prefix position with entry size code.
e.g. 1R1B=20mm Right and Bottom entries.

Initiate Option	Code
Telephone	*T
Relay	*R
EOL Resistor	*E
None	N

*Not available on UL versions.

Guard	Code
None	N
Yes	Y

Label	Code
None	N
Yes	Y
(Please specify)	

Finish	Code
Red	R
Blue	B
Yellow	Y
Yellow/Black Stripe	X
Grey	G
White	W
Special Finish	S

All the above specifications, dimensions, weights and tolerances are nominal (typical) and MEDC reserve the right to vary all data without prior notice. No liability is accepted for any consequence of use.

Distribuição: Segurança Industrial Equipamentos
Fone/Fax: (41) 4063-9687
cml@segind.com.br - segindbr@hotmail.com
www.segind.com.br